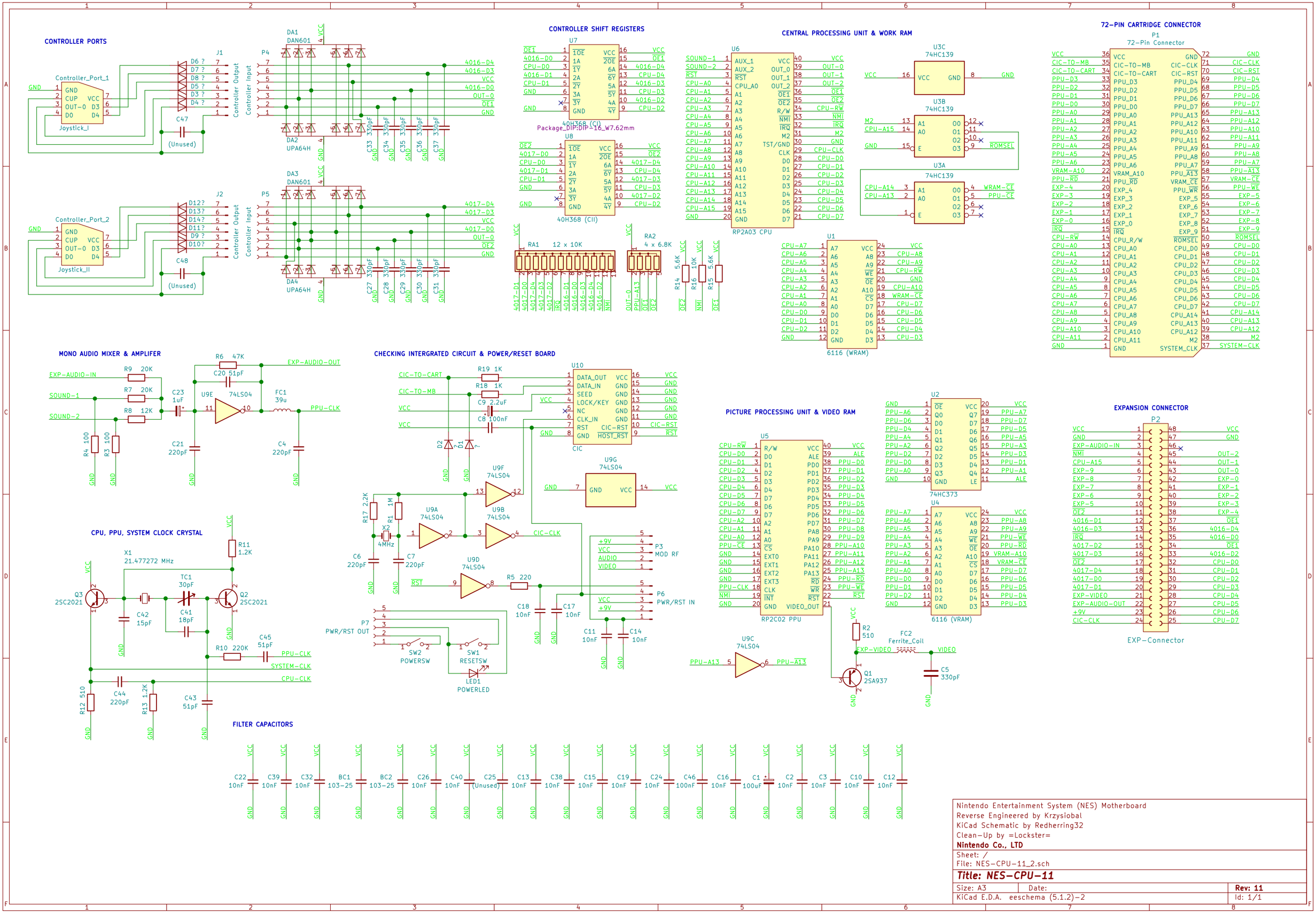

Nintendo Entertainment System (NES) Motherboard
Reverse Engineered by Krzysiobal
KiCad Schematic by Redherring32
Clean-Up by =Lockster=
Nintendo Co., LTD

Sheet: /
File: NES-CPU-11_2.sch

Title: NES-CPU-11

Size: A3	Date:	**Rev: 11**
KiCad E.D.A. eeschema (5.1.2)-2		Id: 1/1